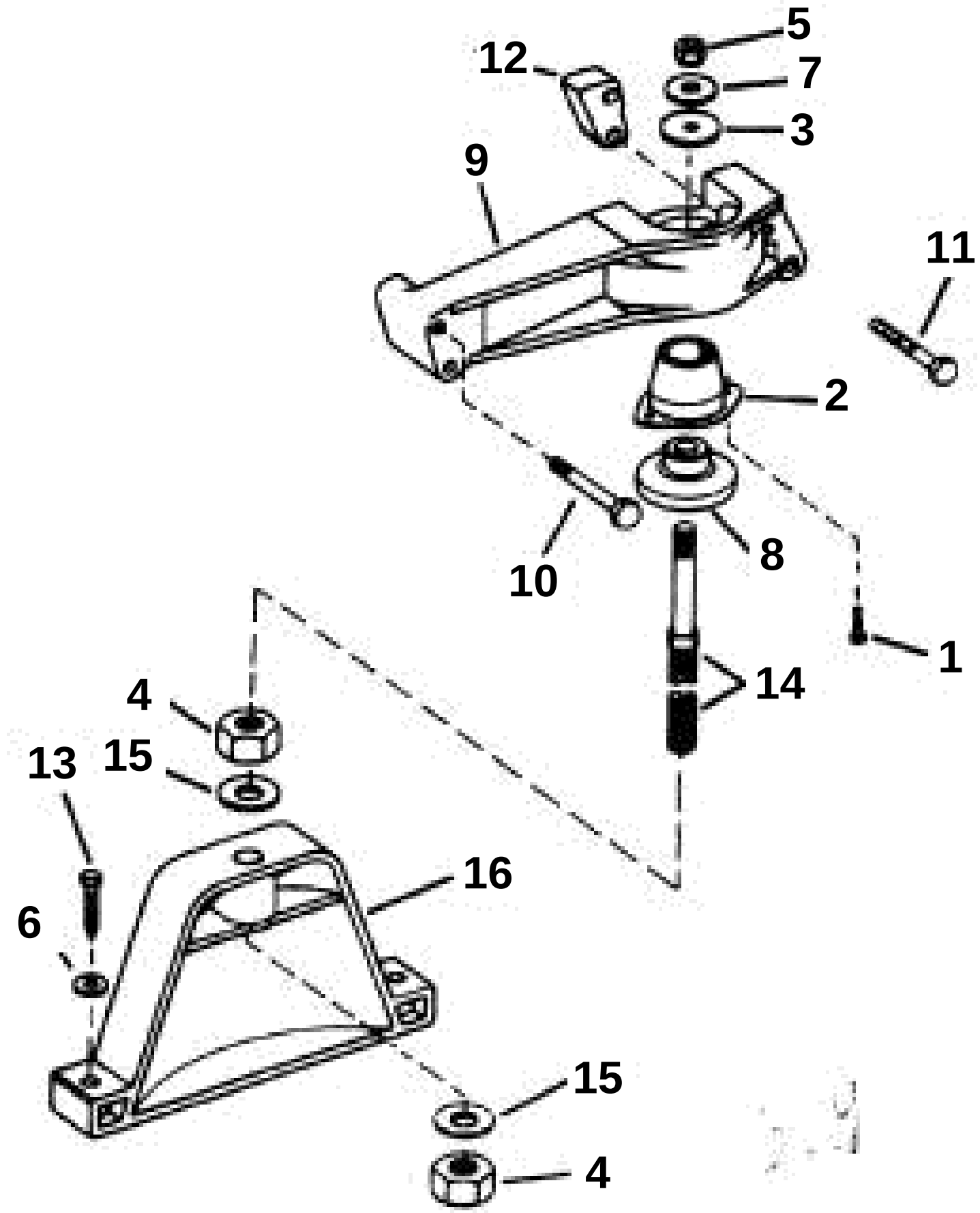
5
12
7
3
9
11
2
10
8
1
14
4
13
15
16
6
15
4

FRONT MOUNT

REF	PART NO.	QTY	DESCRIPTION
1	3852474	2	Screw, Mount to bracket
2	3853789	1	Rubber cushion
3	3853788	1	Washer
4	3852436	2	Nut
5	3852123	1	Nut, Front mount
6	3852078	2	Washer, Lag screw
7	3852422	1	Washer, Upper
8	3852593	1	Spacer, Lowe r
9	3854251	1	Engine mountings
10	3853367		· Screw, Bracket to engine, starboard
11	3853407	2	· Screw, Bracket to engine, port
12	3853252	1	· Spacer, Front mount, port
13	3852475	2	Screw
14	3853816	1	Screw, Trim adjust
15	3852000	2	Washer, Mount
16	3852586	1	Front support, Front